Kingbright

3x2.4mm SMD CHIP LED LAMP

Part Number: KP-23QBC-G-F Blue

ATTENTION
OBSERVE PRECAUTIONS
FOR HANDLING
ELECTROSTATIC
DISCHARGE
SENSITIVE
DEVICES

Features

- 3mmx2.4mm SMT LED, 1.05mm thickness.
- Low power consumption.
- Wide viewing angle.
- Ideal for backlight and indicator.
- Various colors and lens types available.
- Package : 2000pcs / reel.
- Moisture sensitivity level : level 3.
- RoHS compliant.

Description

The Blue source color devices are made with InGaN Light Emitting Diode.

Static electricity and surge damage the LEDS.

It is recommended to use a wrist band or anti-electrostatic glove when handling the LEDs.

All devices, equipment and machinery must be electrically grounded.

Package Dimensions

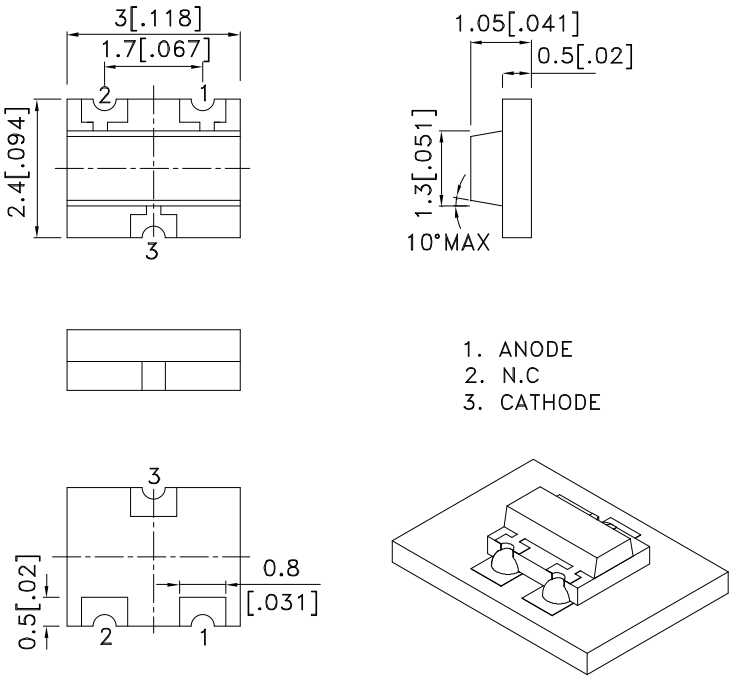

Notes:
1. All dimensions are in millimeters (inches).
2. Tolerance is ±0.2(0.008") unless otherwise noted.
3. The specifications, characteristics and technical data described in the datasheet are subject to change without prior notice.
4. The device has a single mounting surface. The device must be mounted according to the specifications.

Selection Guide

Part No.	Dice	Lens Type	Iv (mcd) [2] @ 20mA		Viewing Angle [1]
			Min.	Typ.	2θ1/2
KP-23QBC-G-F	Blue (InGaN)	Water Clear	110	180	120°

Notes:
1. θ1/2 is the angle from optical centerline where the luminous intensity is 1/2 of the optical peak value.
2. Luminous intensity/ luminous Flux: +/-15%.

Electrical / Optical Characteristics at TA=25°C

Symbol	Parameter	Device	Typ.	Max.	Units	Test Conditions
λpeak	Peak Wavelength	Blue	461		nm	I_F=20mA
λD [1]	Dominant Wavelength	Blue	465		nm	I_F=20mA
Δλ1/2	Spectral Line Half-width	Blue	25		nm	I_F=20mA
C	Capacitance	Blue	100		pF	V_F=0V;f=1MHz
V_F [2]	Forward Voltage	Blue	3.3	4	V	I_F=20mA
I_R	Reverse Current	Blue		50	uA	V_R=5V

Notes:
1.Wavelength: +/-1nm.
2. Forward Voltage: +/-0.1V.

Absolute Maximum Ratings at TA=25°C

Parameter	Blue	Units
Power dissipation	120	mW
DC Forward Current	30	mA
Peak Forward Current [1]	150	mA
Reverse Voltage	5	V
Operating Temperature	-40°C To +85°C	
Storage Temperature	-40°C To +85°C	

Note:
1. 1/10 Duty Cycle, 0.1ms Pulse Width.

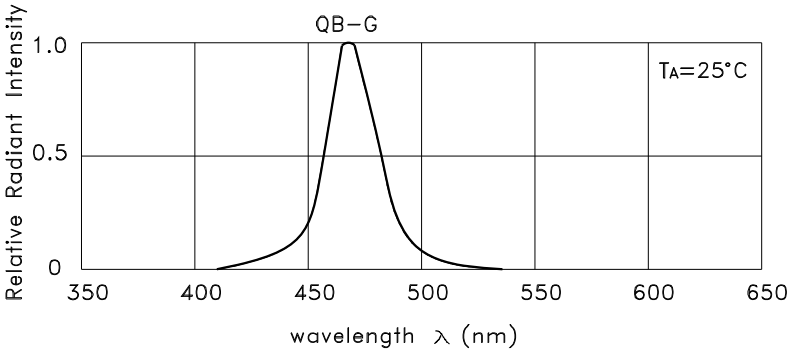

RELATIVE INTENSITY Vs. WAVELENGTH

Blue **KP-23QBC-G-F**

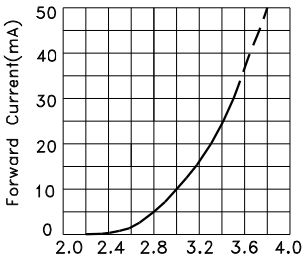

FORWARD CURRENT Vs.
FORWARD VOLTAGE

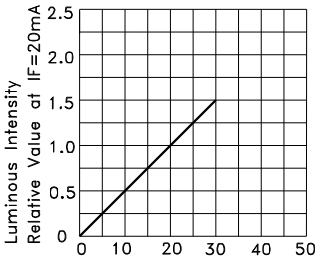

LUMINOUS INTENSITY Vs.
FORWARD CURRENT

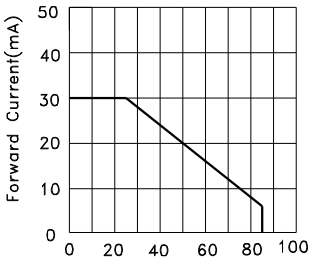

FORWARD CURRENT
DERATING CURVE

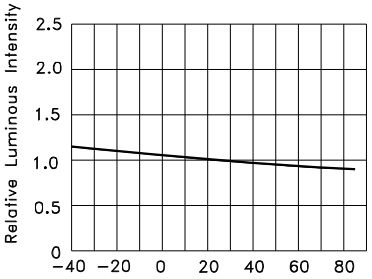

LUMINOUS INTENSITY Vs.
AMBIENT TEMPERATURE

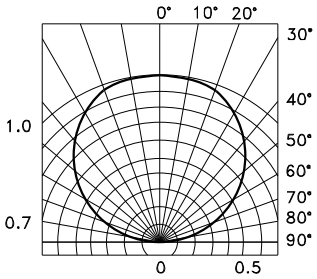

SPATIAL DISTRIBUTION

KP-23QBC-G-F

Reflow soldering is recommended and the soldering profile is shown below.
Other soldering methods are not recommended as they might cause damage to the product.

Reflow Soldering Profile For Lead-free SMT Process.

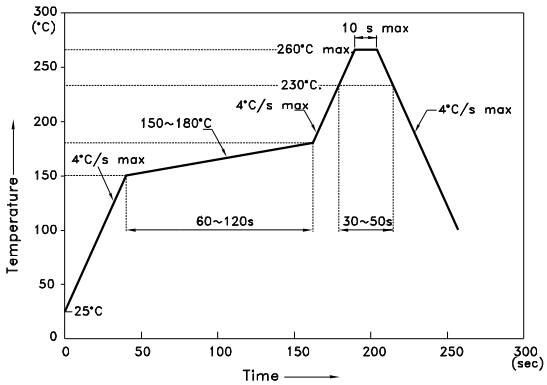

NOTES:
1. We recommend the reflow temperature 245°C(+/-5°C).The maximum soldering temperature should be limited to 260°C.
2. Don't cause stress to the epoxy resin while it is exposed to high temperature.
3. Number of reflow process shall be 2 times or less.

Recommended Soldering Pattern
(Units : mm; Tolerance: ± 0.1)

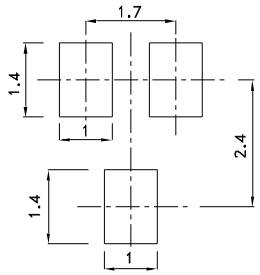

Reel Dimension

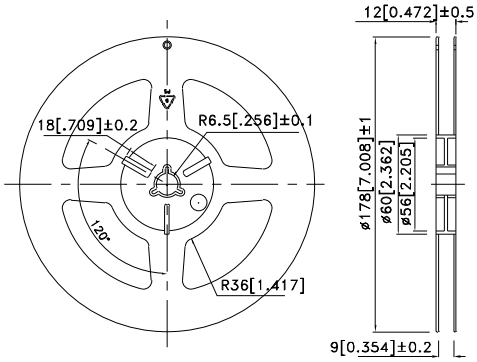

Tape Dimensions
(Units : mm)

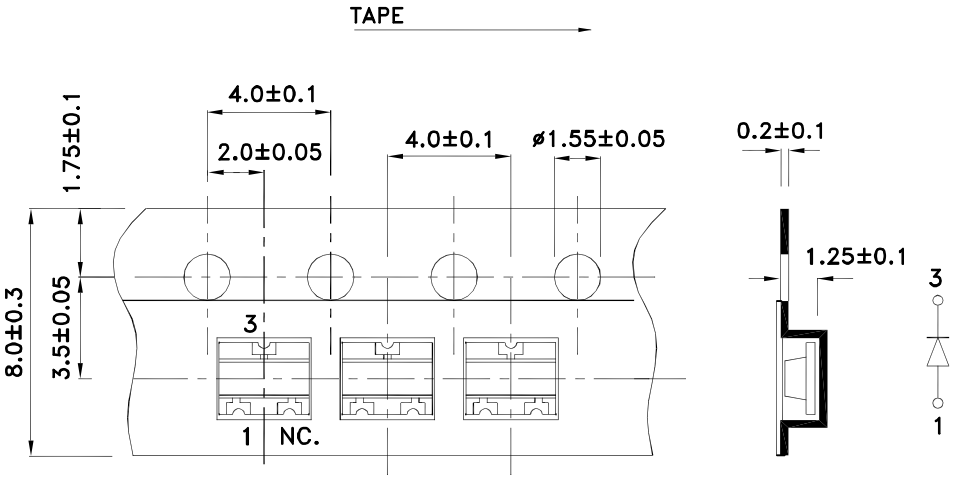
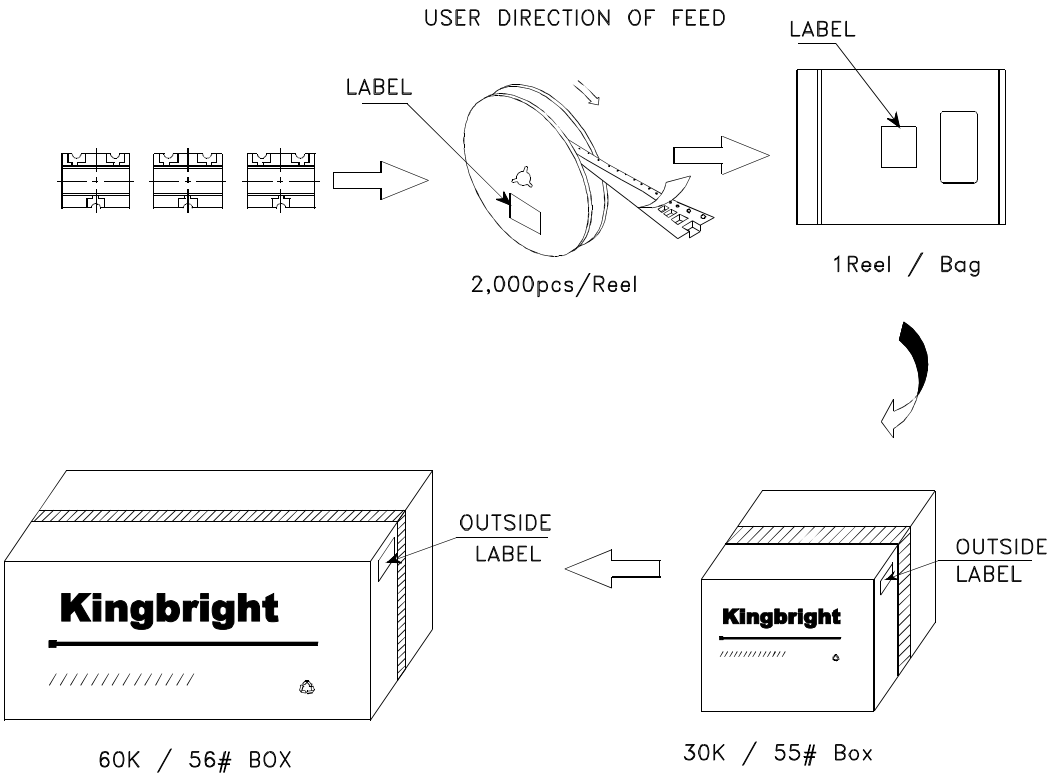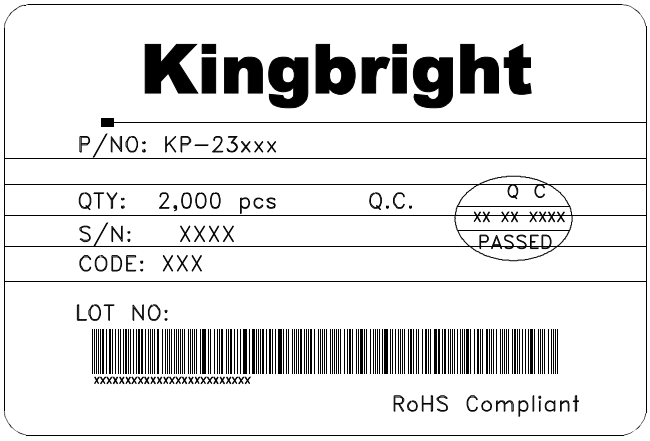
PACKING & LABEL SPECIFICATIONS **KP-23QBC-G-F**